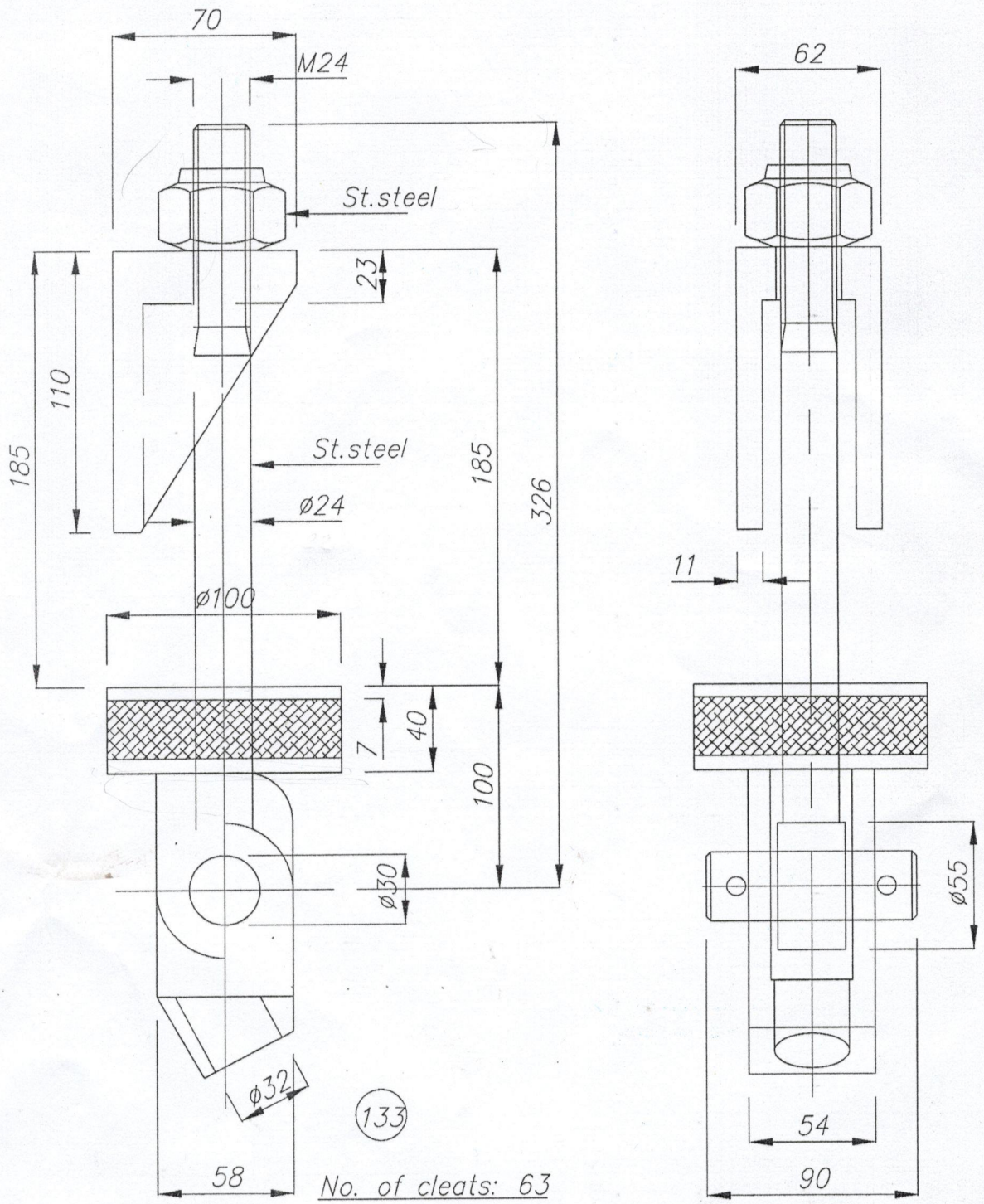

ITEM No.	OFF No.	DWG No.	DENOMINATION	DIMENSION	MATERIAL	REMARKS

COOPS & NIEBORG BV
HOOGEZAND-HOLLAND
P.O.BOX 226
9600 AE Hoogezand
TEL.00-31-(0)598-395500
Fax.00-31-(0)598-392427
E-mail: tekenkamer @ coops-nieborg.nl
www.coops-nieborg.nl

Cleat type "A" MGN 11019-M24

Bodewes

SCALE 1:
DRAWN-DATE E.W. 11-12-02
CHECKED
TOLERANCE SYSTEM DIN 2310

YARD DRAWING NO.:	YARD NO.:	DRAWING No.	FORM	SHEET	EDITION
	636	011-3			

Copyright by konstruktiebedrijf Coops & Nieborg B.V.